S4D400-AP12-38

AC axial fan

sickle-shaped blades (S series)

with guard grille for short nozzle

Beijing Hengrui Mechanical and Electrical Equipment Co,Ltd
Phone +86 10-62547612
zhangyu@bjhengrui.cn
en.bjhengrui.com

Nominal data

Type	**S4D400-AP12-38**
Motor	**M4D074-EI**

Phase		3~	3~	3~	3~
Nominal voltage	VAC	230	230	400	400
Wiring		Δ	Δ	Y	Y
Frequency	Hz	50	60	50	60
Method of obtaining data		fa	fa	fa	fa
Valid for approval/standard		CE	CE	CE	CE
Speed (rpm)	min^{-1}	1450	1690	1450	1690
Power consumption	W	135	185	135	185
Current draw	A	0.76	0.68	0.44	0.39
Max. back pressure	Pa	105	120	105	120
Max. back pressure	in. wg	0.42	0.48	0.42	0.48
Min. ambient temperature	°C	-25	-25	-25	-25
Max. ambient temperature	°C	60	60	60	60
Starting current	A	3.0	3.0	1.7	1.7

ml = Max. load · me = Max. efficiency · fa = Free air · cs = Customer specification · ce = Customer equipment
Subject to change

Data according to Commission Regulation (EU) 327/2011

		Actual	Req. 2015
01 Overall efficiency η_{es}	%	32.7	29.1
02 Measurement category		A	
03 Efficiency category		Static	
04 Efficiency grade N		43.6	40
05 Variable speed drive		No	

09 Power consumption P_e	kW	0.19
09 Air flow q_v	m³/h	2595
09 Pressure increase p_{fs}	Pa	91
10 Speed (rpm) n	min^{-1}	1415
11 Specific ratio*		1.00

Data obtained at optimum efficiency level.
The ErP data is determined using a motor-impeller combination in a standardized measurement setup.

* Specific ratio = 1 + p_{fs} / 100 000 Pa

LU-27622

AC axial fan

sickle-shaped blades (S series)

with guard grille for short nozzle

Technical description

Weight	6.1 kg
Fan size	400 mm
Rotor surface	Painted black
Terminal box material	ABS plastic, black
Blade material	Sheet steel, painted black
Guard grille material	Steel, phosphated and coated with black plastic
Number of blades	5
Airflow direction	"V"
Direction of rotation	Counterclockwise, viewed toward rotor
Degree of protection	IP44; installation- and position-dependent as per EN 60034-5
Insulation class	"F"
Moisture (F) / Environmental (H) protection class	H1
Max. permitted ambient temp. for motor (transport/storage)	+ 80 °C
Min. permitted ambient temp. for motor (transport/storage)	- 40 °C
Installation position	Shaft horizontal or rotor on bottom; rotor on top on request
Condensation drainage holes	On rotor side
Mode	S1
Motor bearing	Ball bearing
Touch current according to IEC 60990 (measuring circuit Fig. 4, TN system)	< 0.75 mA
Electrical hookup	Via terminal box
With cable	Variable
Protection class	I (with customer connection of protective earth)
Conformity with standards	EN 60335-1, motor does not have factory-installed overheating protection; CE

Beijing Hengrui Mechanical and Electrical Equipment Co,Ltd Phone +86 10-62547612 · Fax +86 10-62547612 · zhangyu@bjhengrui.cn · en.bjhengrui.com

AC axial fan

sickle-shaped blades (S series)

with guard grille for short nozzle

Product drawing

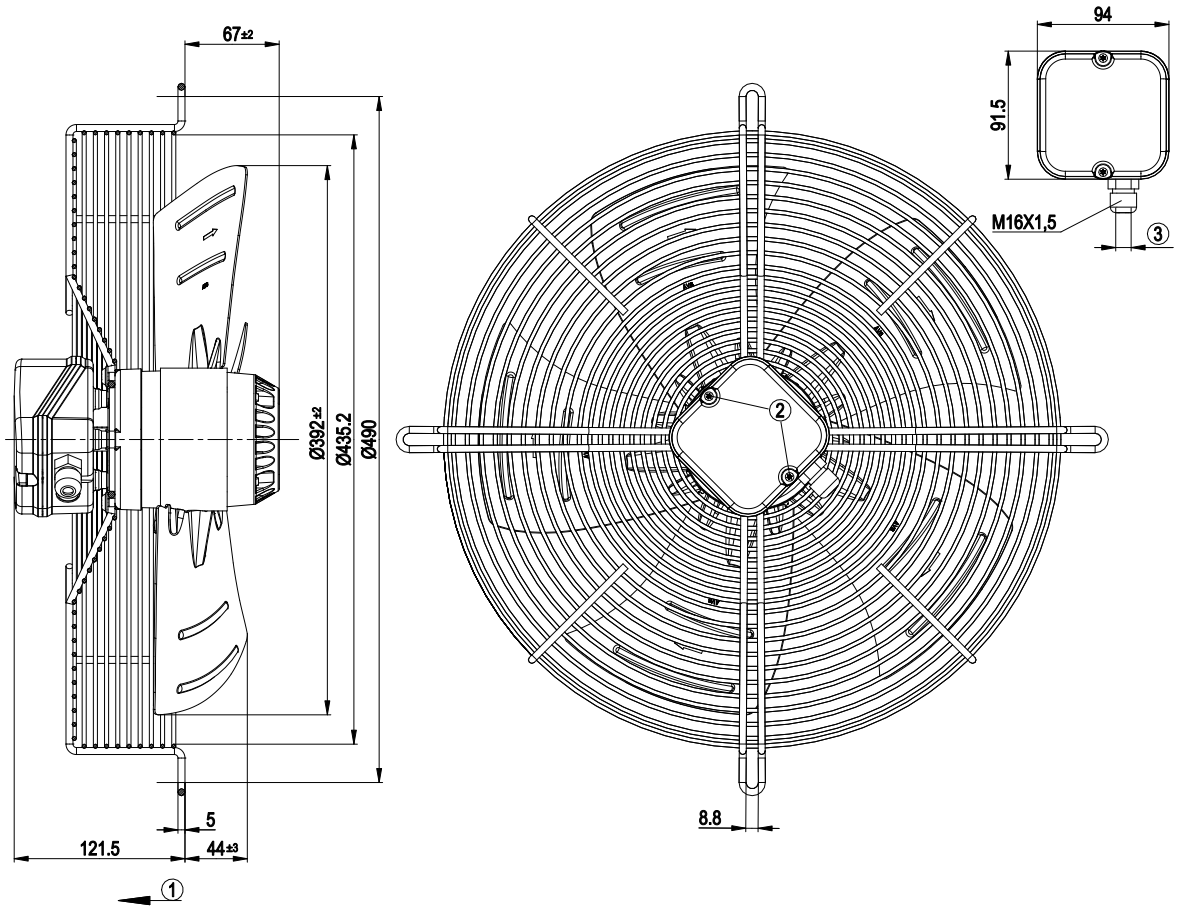

1	Direction of air flow "V"
2	Tightening torque 0.5 ± 0.1 Nm
3	Cable diameter max. 7.5 mm, tightening torque 1.3 ± 0.2 Nm

Beijing Hengrui Mechanical and Electrical Equipment Co,Ltd Phone +86 10-62547612 · Fax +86 10-62547612 · zhangyu@bjhengrui.cn · en.bjhengrui.com

AC axial fan

sickle-shaped blades (S series)

with guard grille for short nozzle

Connection diagram

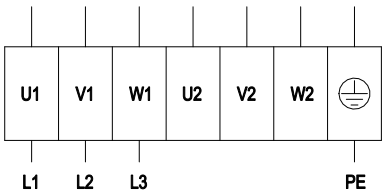

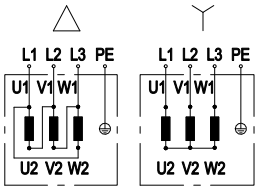

	Three-phase motor	Y	Star connection	Δ	Delta connection
L1	= U1 = black	L2	= V1 = blue	L3	= W1 = brown
U2	green	V2	white	W2	yellow
PE	PE (green/yellow)				

Beijing Hengrui Mechanical and Electrical Equipment Co,Ltd Phone +86 10-62547612 · Fax +86 10-62547612 · zhangyu@bjhengrui.cn · en.bjhengrui.com

S4D400-AP12-38

AC axial fan

sickle-shaped blades (S series)

with guard grille for short nozzle

Curves: Air performance 50 Hz

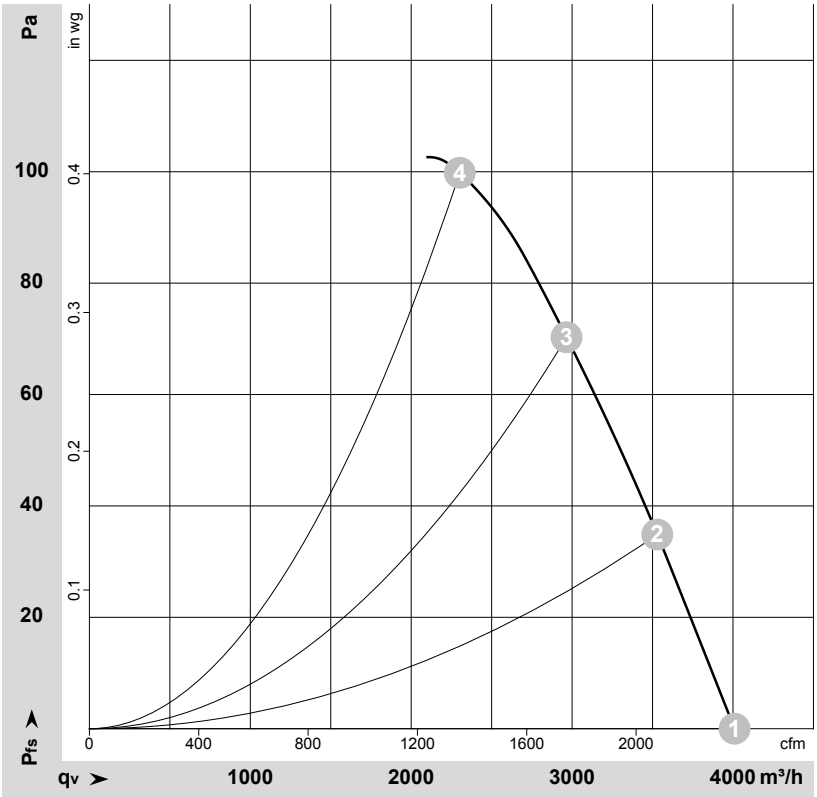

ρ = 1.15 kg/m³ ± 2 %

Measurement: LU-27622-1

Air performance measured according to ISO 5801 installation category A. For detailed information on the measurement setup, contact ebm-papst. Intake sound level: Sound power level according to ISO 13347 / sound pressure level measured at 1 m distance from fan axis. The values given are valid under the specified measuring conditions and may vary due to conditions of installation. For deviations from the standard configuration, the parameters have to be checked on the installed unit.

Measured values

	Wired	U	f	n	P_e	I	q_V	p_{fs}	q_V	p_{fs}
		V	Hz	min^{-1}	W	A	m^3/h	Pa	cfm	in. wg
1	Y	400	50	1450	135	0.44	4010	0	2360	0.00
2	Y	400	50	1435	161	0.47	3530	35	2080	0.14
3	Y	400	50	1420	183	0.49	2965	70	1745	0.28
4	Y	400	50	1410	204	0.50	2300	100	1355	0.40

Wired = Wiring · U = Power supply · f = Frequency · n = Speed (rpm) · P_e = Power consumption · I = Current draw · q_V = Air flow · p_{fs} = Pressure increase

Beijing Hengrui Mechanical and Electrical Equipment Co,Ltd Phone +86 10-62547612 · Fax +86 10-62547612 · zhangyu@bjhengrui.cn · en.bjhengrui.com

S4D400-AP12-38

AC axial fan

sickle-shaped blades (S series)

with guard grille for short nozzle

Curves: Air performance 60 Hz

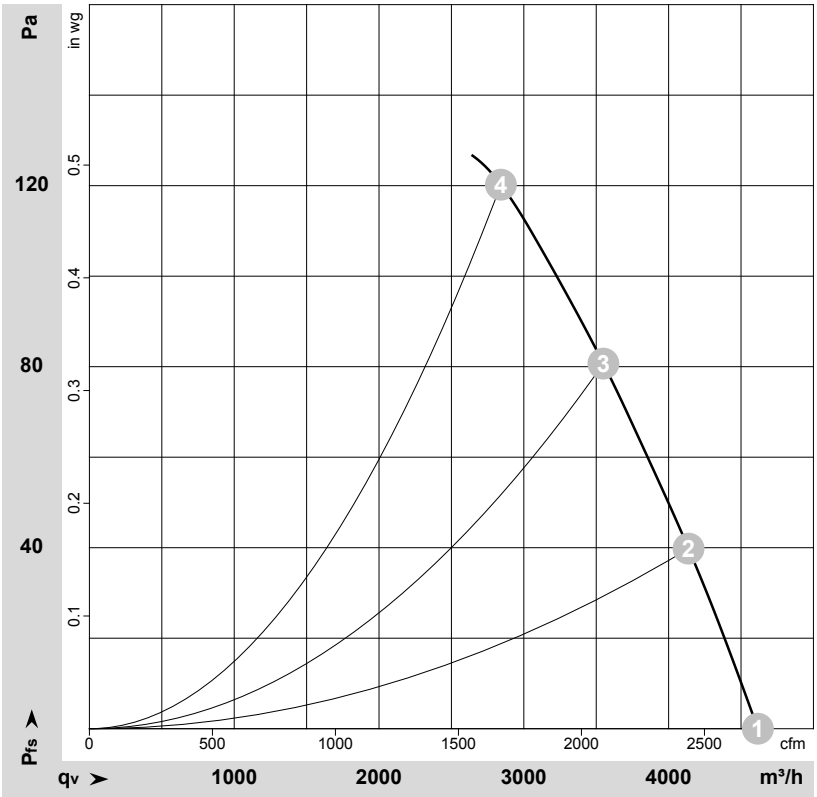

ρ = 1.15 kg/m³ ± 2 %

Measurement: LU-27623-1

Air performance measured according to ISO 5801 installation category A. For detailed information on the measurement setup, contact ebm-papst. Intake sound level: Sound power level according to ISO 13347 / sound pressure level measured at 1 m distance from fan axis. The values given are valid under the specified measuring conditions and may vary due to conditions of installation. For deviations from the standard configuration, the parameters have to be checked on the installed unit.

Measured values

	Wired	U	f	n	P_e	I	q_V	p_{fs}	q_V	p_{fs}
		V	Hz	min^{-1}	W	A	m^3/h	Pa	cfm	in. wg
1	Y	400	60	1690	185	0.39	4615	0	2715	0.00
2	Y	400	60	1660	223	0.45	4140	40	2435	0.16
3	Y	400	60	1635	257	0.49	3550	80	2090	0.32
4	Y	400	60	1605	292	0.54	2840	120	1675	0.48

Wired = Wiring · U = Power supply · f = Frequency · n = Speed (rpm) · P_e = Power consumption · I = Current draw · q_V = Air flow · p_{fs} = Pressure increase

Beijing Hengrui Mechanical and Electrical Equipment Co,Ltd Phone +86 10-62547612 · Fax +86 10-62547612 · zhangyu@bjhengrui.cn · en.bjhengrui.com